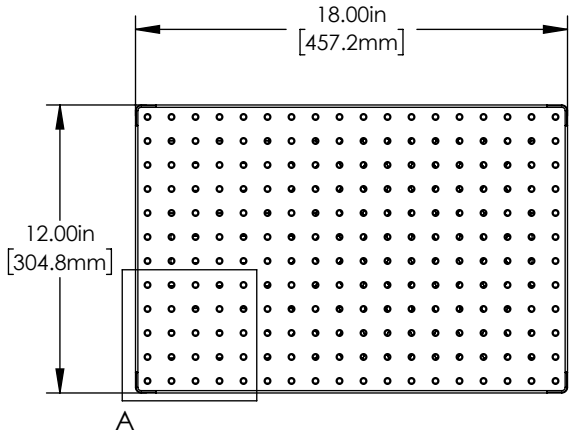

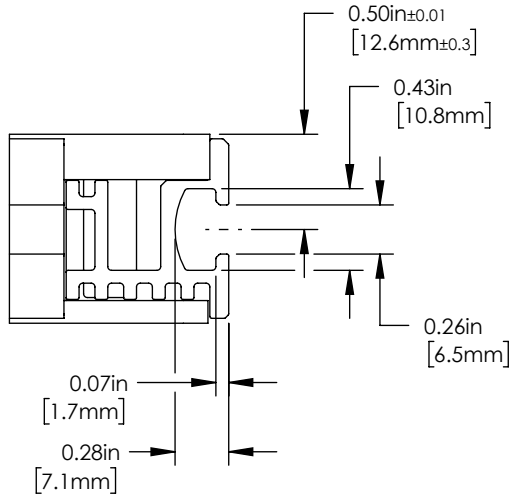

DETAIL B

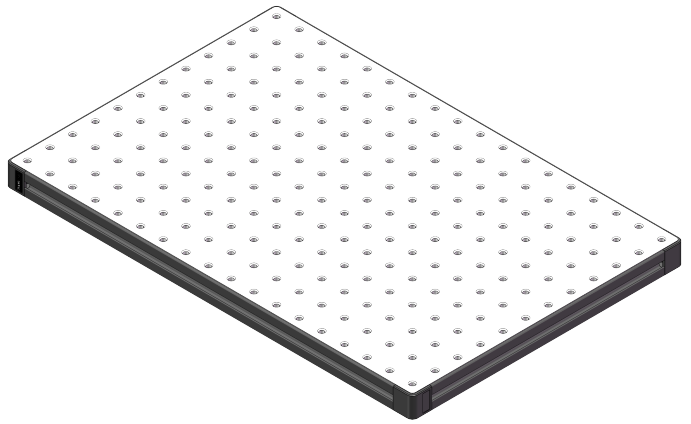

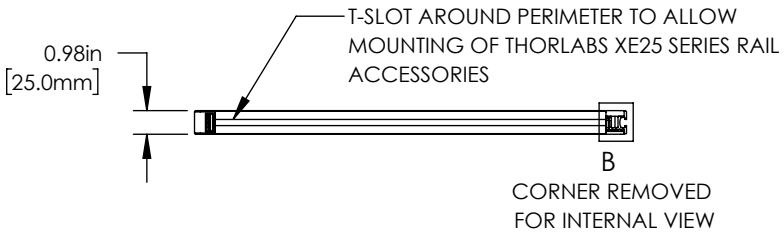

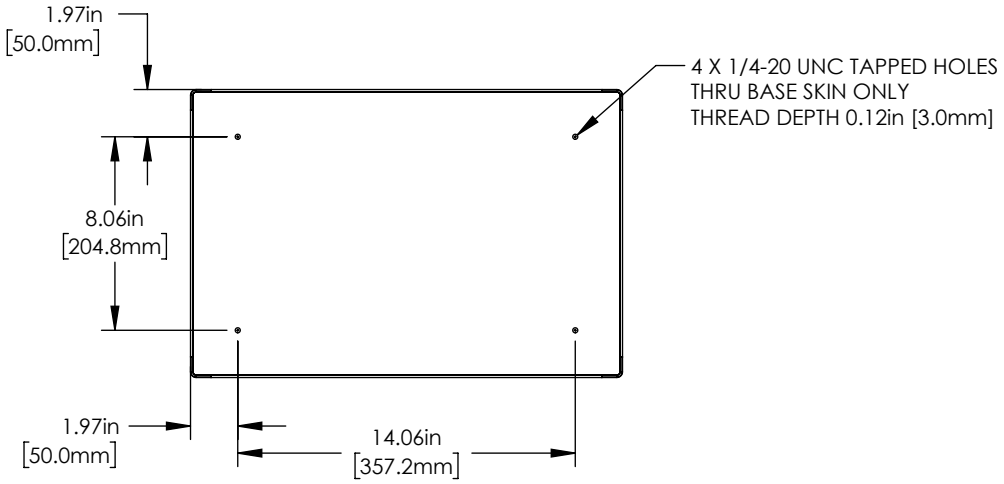

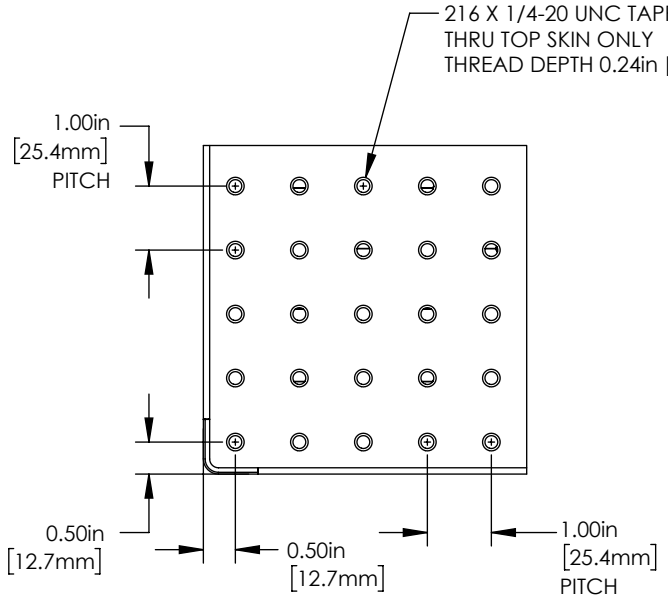

DETAIL A

FOR INFORMATION ONLY
NOT FOR MANUFACTURING PURPOSES

DRAWING PROJECTION		
	NAME	DATE
DRAWN	JMJ	07/OCT/25
APPROVAL	RC	28/JAN/26

COPYRIGHT © 2025 BY THORLABS

VALUES IN PARENTHESIS ARE CALCULATED AND MAY CONTAIN ROUND OFF ERRORS

THORLABS
www.thorlabs.com

ALUMINIUM HONEYCOMB BREADBOARD 12" x 18" x 0.98"

MATERIAL	REV
ALUMINIUM	A

ITEM #	APPROX WEIGHT
AHB1218F	3.9 kg