

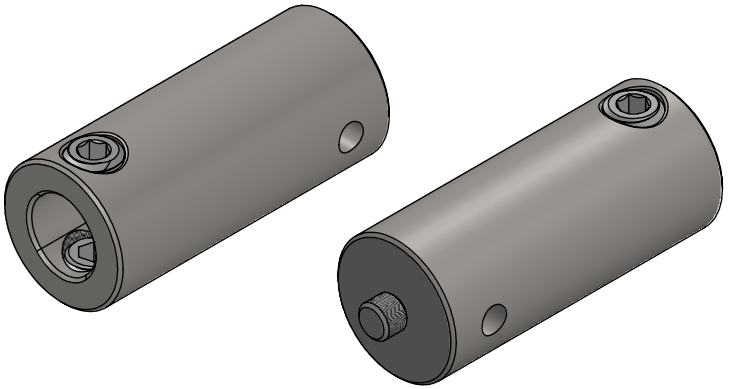

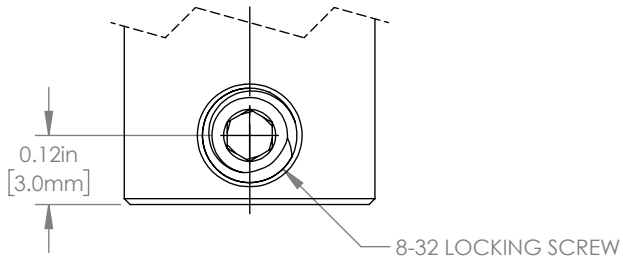

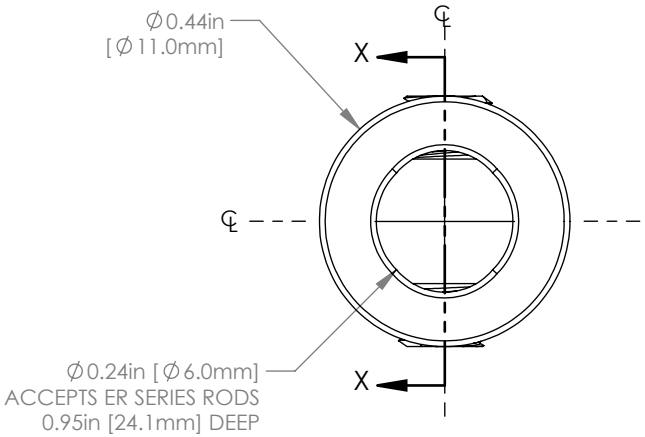

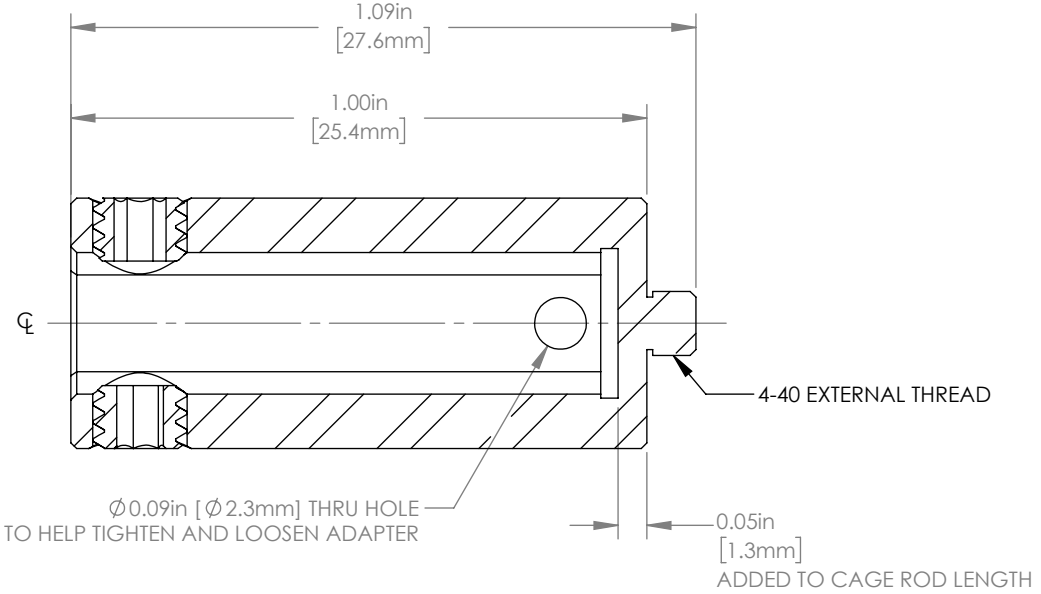

SECTION X-X

FOR INFORMATION ONLY
NOT FOR MANUFACTURING PURPOSES

DRAWING PROJECTION		
	NAME	DATE
DRAWN	ET	12/JUN/21
APPROVAL	AK	23/JUN/21

COPYRIGHT © 2021 BY THORLABS

VALUES IN PARENTHESIS ARE CALCULATED AND MAY CONTAIN ROUNDOFF ERRORS

THORLABS
www.thorlabs.com

EXTENDED ER ROD ADAPTER, 1.0in 4-PACK

MATERIAL	REV
STAINLESS STEEL	A

ITEM #	APPROX WEIGHT
ERSCB1-P4	13.4 g