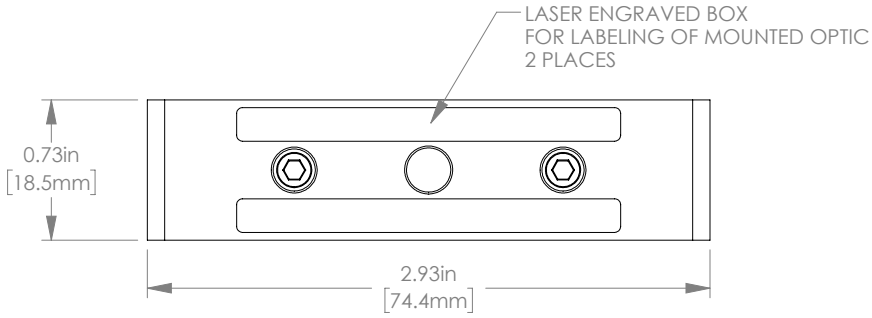

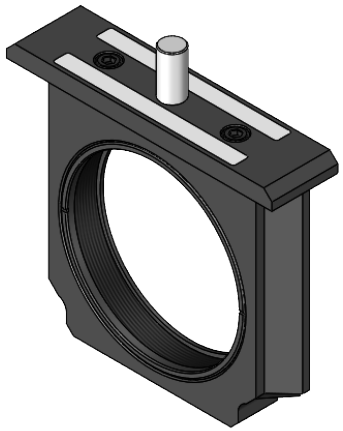

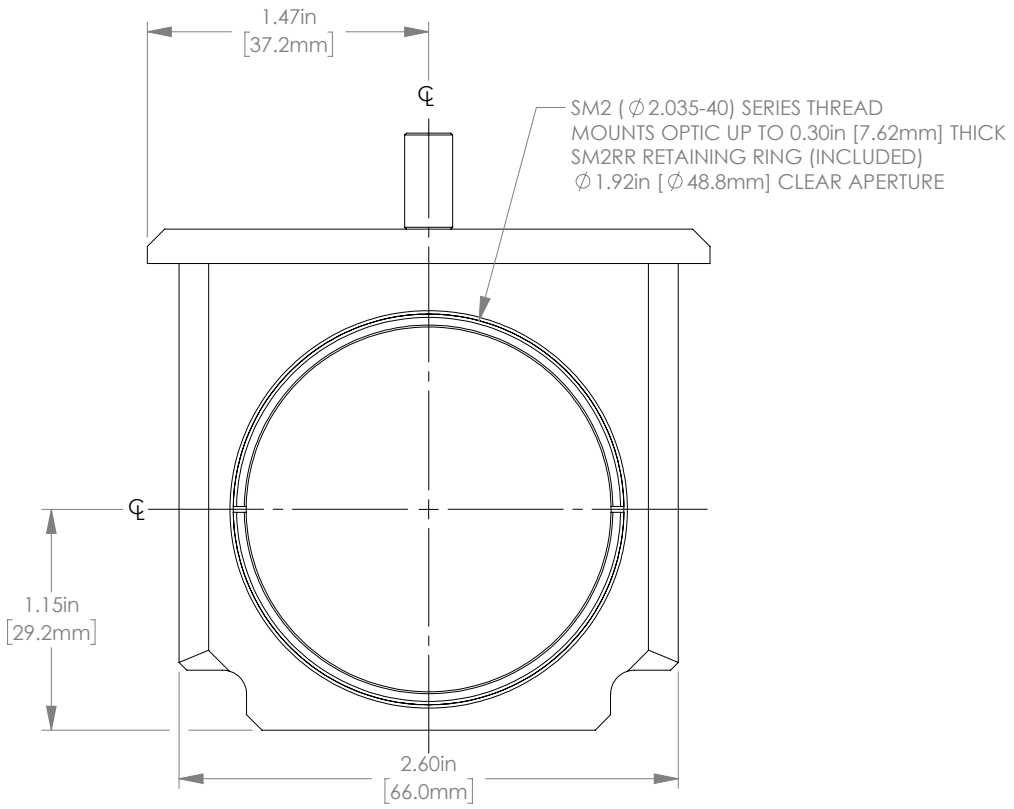

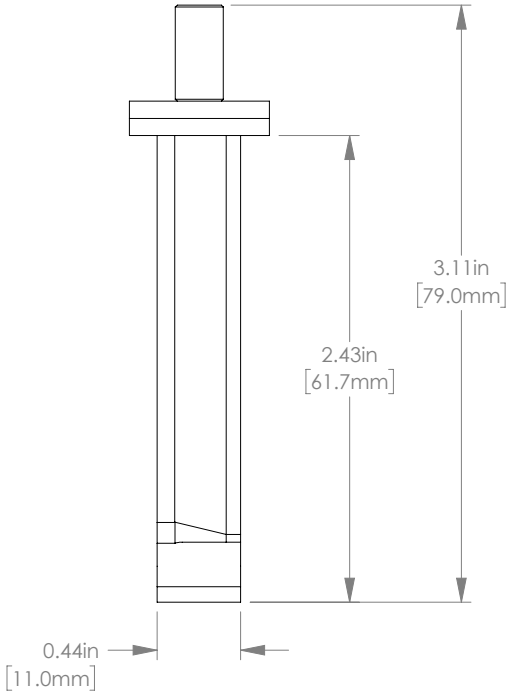

NOTE:

DUE TO SLIGHT DIFFERENCES IN THE SIZE OF EACH FILTER INSERT,
IT MAY BE NECESSARY TO ADJUST THE SPRING PLUNGER TENSION
VIA THE SLOTTED SETSCREW LOCATED ON THE SIDE OF THE LCFH2(/M) HOUSING

FOR INFORMATION ONLY
NOT FOR MANUFACTURING PURPOSES

DRAWING PROJECTION		
	NAME	DATE
DRAWN	HP	25/MAR/16
APPROVAL	AK	05/MAR/24

COPYRIGHT © 2016 BY THORLABS

VALUES IN PARENTHESIS ARE CALCULATED AND MAY CONTAIN ROUNDOFF ERRORS

THORLABS
www.thorlabs.com

EXTRA FILTER HOLDER INSERT FOR LCFH2

MATERIAL	REV
N/A	B
ITEM #	APPROX WEIGHT
LCFH2-F	0.07 kg