

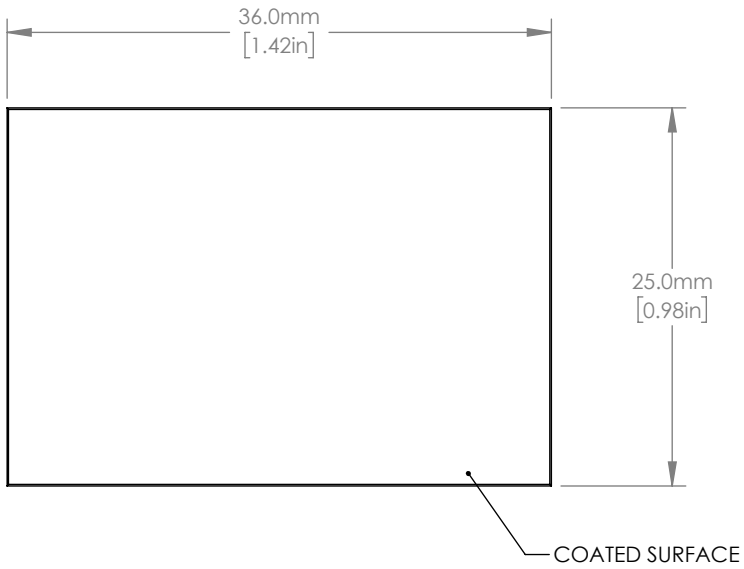

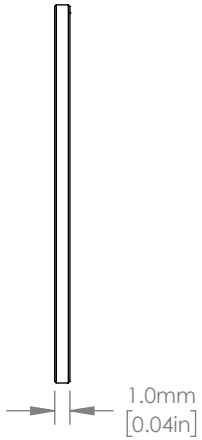

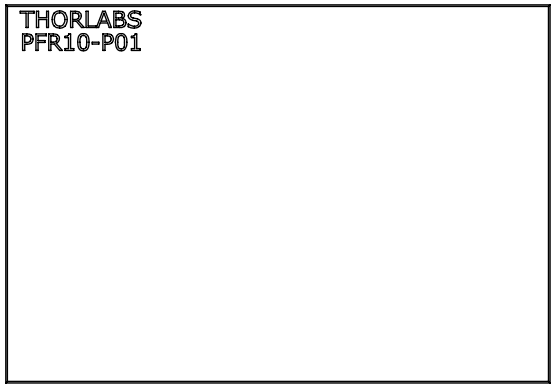

NOTES/SPECIFICATIONS:

1. CLEAR APERTURE: >22.5x32.4mm
2. SURFACE FLATNESS: λ AT 632.8nm OVER CLEAR APERTURE
3. SURFACE QUALITY: 40-20 SCRATCH-DIG
4. PARALLELISM: <3 arcmin
5. THICKNESS TOLERANCE: ±0.1mm
6. DMENSIONAL TOLERANCE: ±0.1mm
7. COATING: PROTECTED SILVER
   Ravg >97% FROM 450nm-2µm
   Ravg >95% FROM 2µm-20µm
   AOI: 0° TO 45°

FOR INFORMATION ONLY
NOT FOR MANUFACTURING PURPOSES

DRAWING PROJECTION		
	NAME	DATE
DRAWN	MG	10/OCT/14
APPROVAL	DS	18/NOV/22

COPYRIGHT © 2022 BY THORLABS

VALUES IN PARENTHESIS ARE CALCULATED AND MAY CONTAIN ROUNDOFF ERRORS

THORLABS
www.thorlabs.com

25x36mm PROTECTED SILVER MIRROR

MATERIAL	REV
UV GRADE FUSED SILICA	B

ITEM #	APPROX WEIGHT
PFR10-P01	2 g