

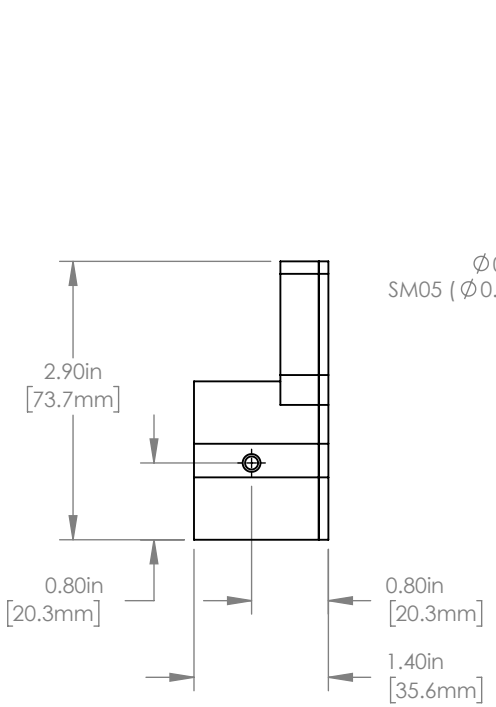

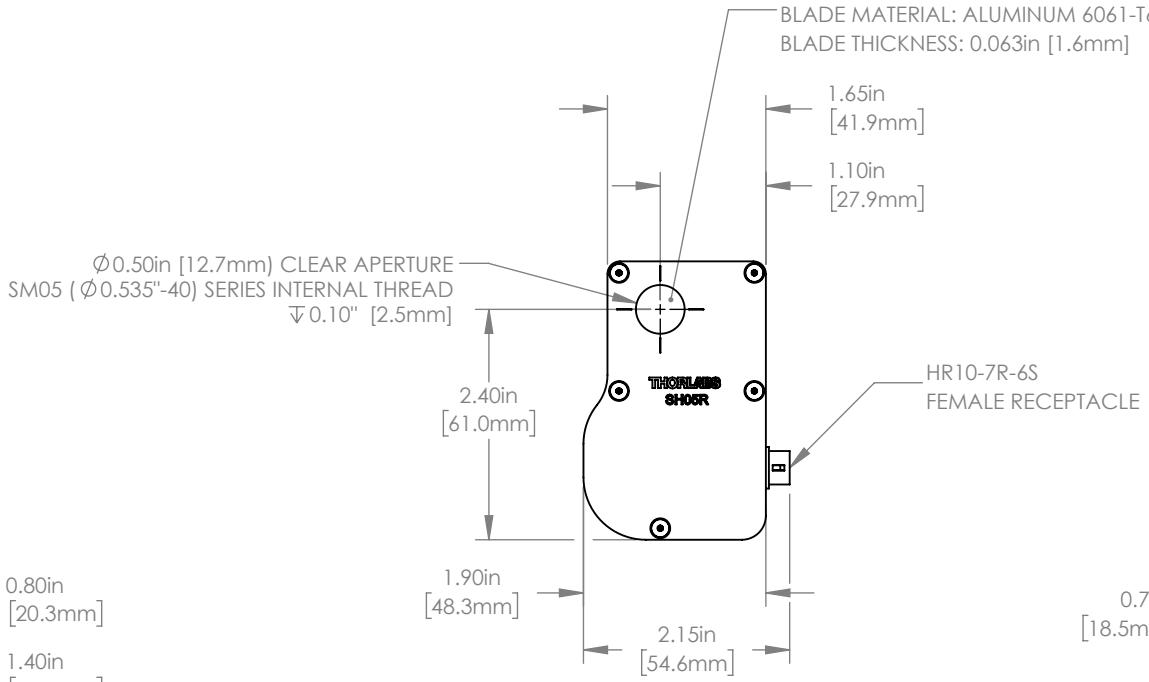

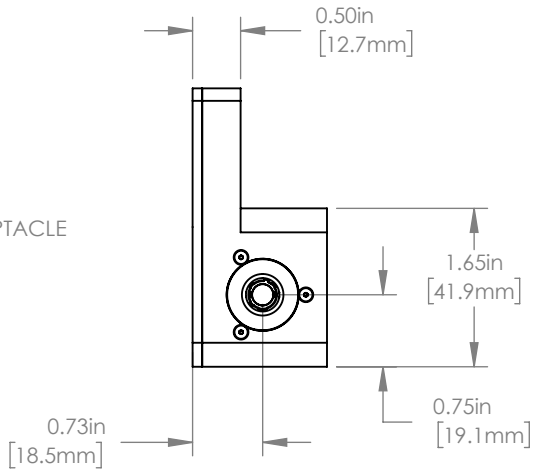

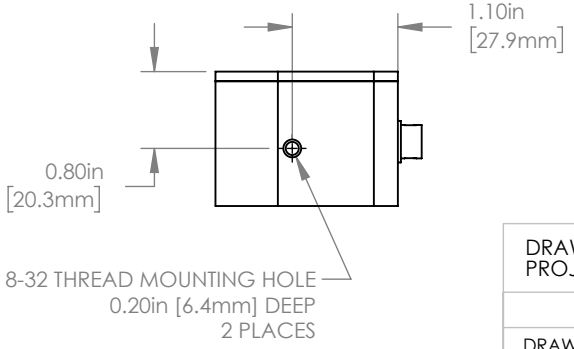

FOR INFORMATION ONLY
NOT FOR MANUFACTURING PURPOSES

DRAWING PROJECTION		
	NAME	DATE
DRAWN	TA	07/DEC/21
APPROVAL	RH	07/DEC/21

COPYRIGHT © 2021 BY THORLABS

VALUES IN PARENTHESIS ARE CALCULATED AND MAY CONTAIN ROUNDOFF ERRORS

THORLABS
www.thorlabs.com

∅1/2" BEAM SHUTTER

MATERIAL	REV
N/A	A

ITEM #	APPROX WEIGHT
SH05R	0.17 kg