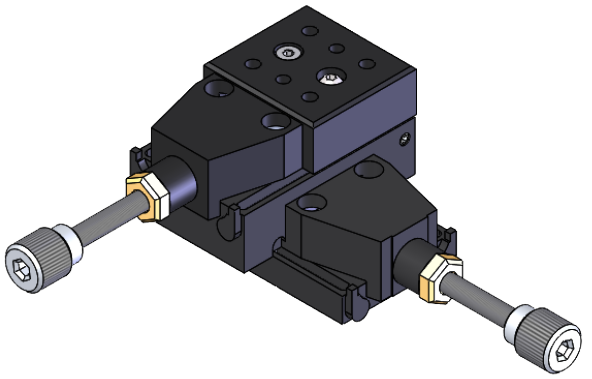

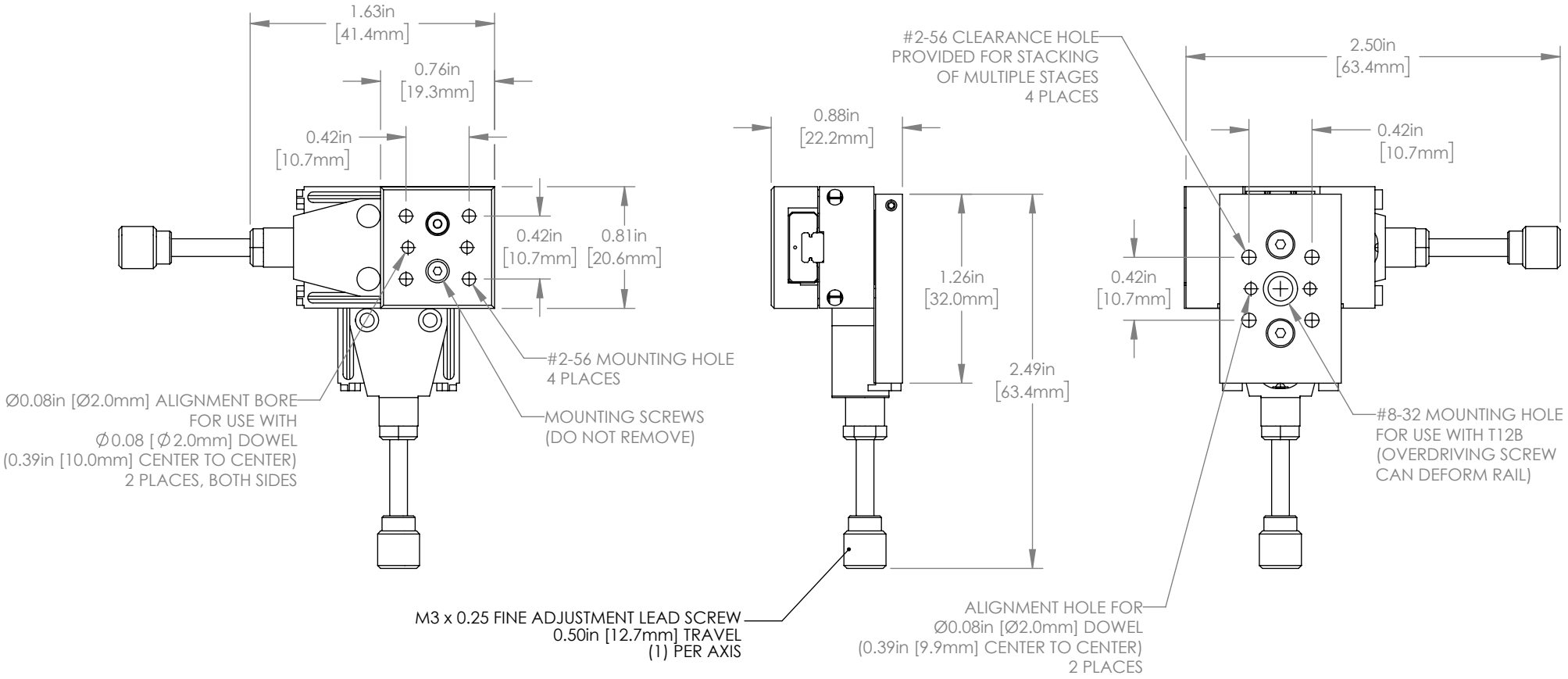

FOR INFORMATION ONLY
NOT FOR MANUFACTURING PURPOSES

DRAWING PROJECTION		
	NAME	DATE
DRAWN	KN	02 AUG 12
APPROVAL	PG	09 AUG 12

COPYRIGHT © 2012 BY THORLABS

VALUES IN PARENTHESIS ARE CALCULATED AND MAY CONTAIN ROUNDOFF ERRORS

THORLABS

MINI XY TRANSLATION STAGE

MATERIAL	REV
N/A	F

ITEM #	APPROX WEIGHT
T12XY	0.09 kg